KOBE PROFESSIONAL AIR TOOLS

NB160 HIGH PERFORMANCE NIBBLER

Order Code: KBE-270-3400K

Spare Parts Breakdown

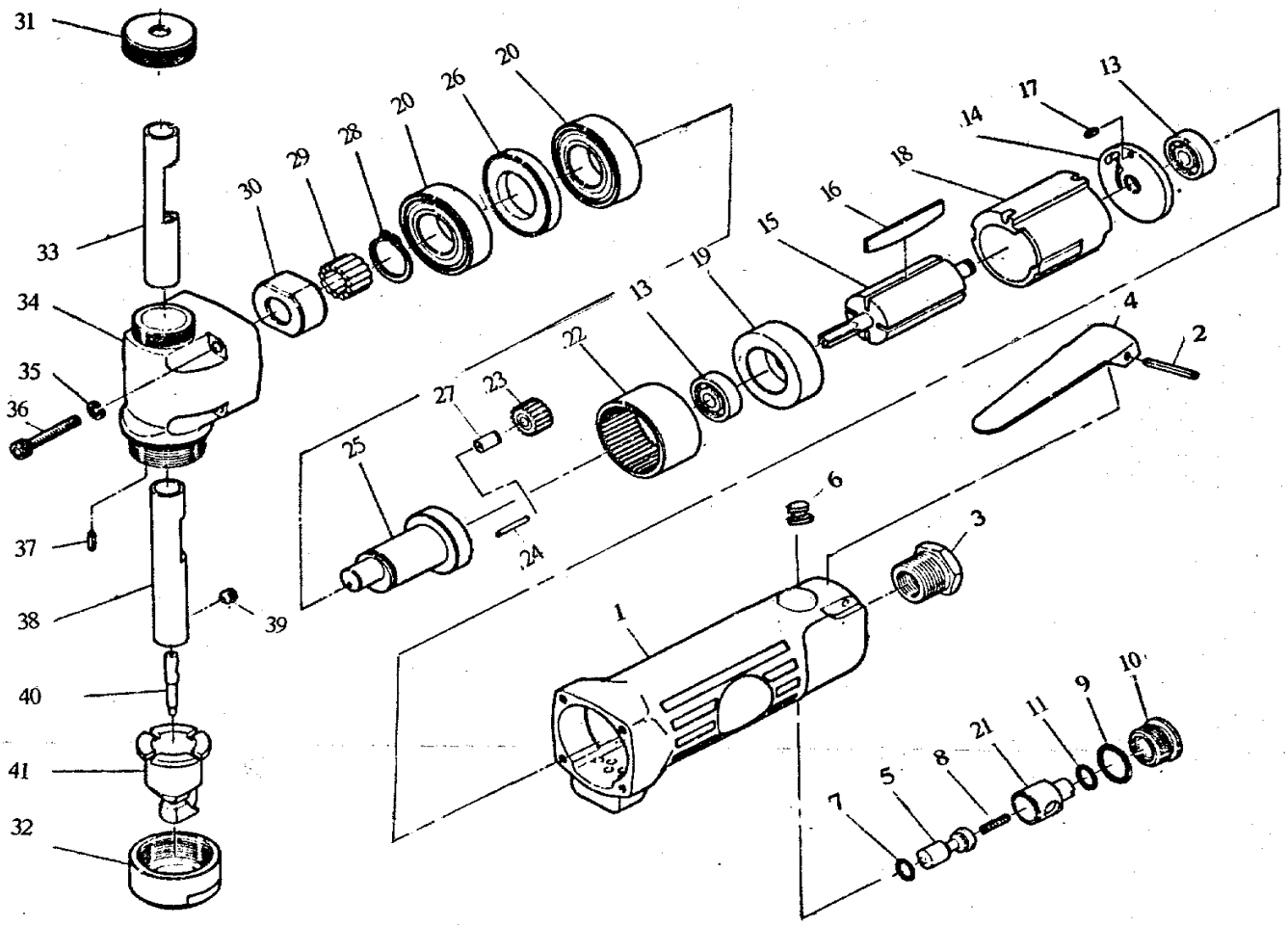

OIL DAILY

No.	Order Code	Description
1	KBE-298-0533S	Motor Housing
2	KBE-298-0536S	Lever Pin
3	KBE-298-0539S	Inlet Bushing
4	KBE-298-0542S	Safety Throttle Lever
5	KBE-298-0545S	Valve Stem
6	KBE-298-0548S	Anvil Bushing
7	KBE-298-0551S	O-Ring
8	KBE-298-0554S	Valve Spring
9	KBE-298-0557S	O-Ring
10	KBE-298-0560S	Throttle Valve Plug
11	KBE-298-0563S	O-Ring
13	CES-298-0627B	Bearing (2)
14	KBE-298-0566S	Rear End Plate
15	KBE-298-0569S	Rotor

No.	Order Code	Description
16	KBE-298-0040S	Rotor Vanes (4)
17	KBE-298-0575S	Pin Requires (2)
18	KBE-298-0578S	Cylinder
19	KBE-298-0581S	Front End Plate
20	CES-298-6007H	Ball Bearing (2)
21	KBE-298-0584S	Air Regulator
22	KBE-298-0587S	Internal Gear
23	KBE-298-0590S	Planet Gears (3)
24	KBE-298-0593S	Roll Pin (3)
25	KBE-298-0596S	Crank Shaft
26	KBE-298-0599S	Spacer
27	KBE-298-0602S	Bushing (3)
28	KBE-298-0605S	Retaining Ring
29	KBE-298-0608S	Needle Roller (13)

No.	Order Code	Description
30	KBE-298-0611S	Cam
31	KBE-298-0614S	Head Cap
32	KBE-298-0617S	Lock Nut
33	KBE-298-0620S	Guide Bushing
34	KBE-298-0623S	Head
35	KBE-298-0626S	Washer (4)
36	KBE-298-0629S	Screw (4)
37	KBE-298-0632S	Pin
38	KBE-298-5001A	Slide Spindle
39	KBE-298-5002B	Set Screw
40	KBE-298-5003C	Nibbler Punch
41	KBE-298-5004D	Nibbler Die

Distributed by:

KENNEDY TOOLS

Wigston Works, Leicester, England.

ISO 9002 REGISTERED COMPANY

©The Kennedy Group Ltd. November 1997